Contour Deluxe

AUSTRALIAN MADE



Features & Inclusions

Configuration:
- **900-1200:** Single Drawer with Internal Drawer
- **1500-1800:** Two Drawers with Internal Drawers

Mounting: Wall Hung
Shaker Style: Thin (Drawer Fronts Only)
Finish: Polyurethane Finish
Opening: Fingerpull or Handles (additional charge applies for leather handles)
Other: Curved Edges

NOTE: *This vanity does* ***NOT*** *support undercounter basins*

Specifications

Depth: 500mm
Height: 450mm (excl. benchtop thickness)

NOTE: *For structural reasons, curved edges cannot be utilised for plumbing.*

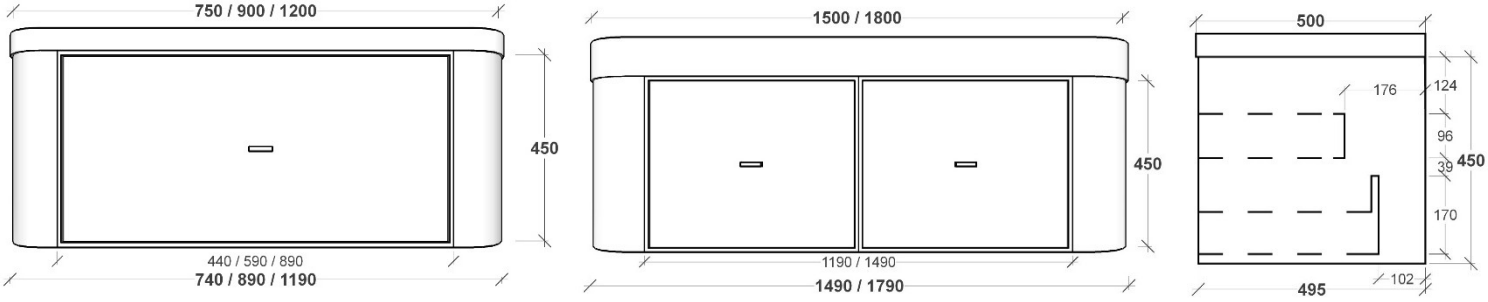

Benchtop	900	1200	1500		1800	
			Single	Double	Single	Double
No Top	**$3,407**	**$3,917**	**$4,858**	**$4,973**	**$5,308**	**$5,441**
	CNX9	CNX12	CNX151	CNX152	CNX181	CNX182
20mm Caesarstone (M1,M2 Standard and Deluxe Colours)	**$3,786**	**$4,352**	**$5,398**	**$5,525**	**$5,898**	**$6,045**
	CNX9S	CNX12S	CNX15S1	CNX15S2	CNX18S1	CNX18S2
20mm Caesarstone Supernatural (M3 Supernatural Colours)	**$3,975**	**$4,570**	**$5,668**	**$5,801**	**$6,193**	**$6,347**
	CNX9SN	CNX12SN	CNX15SN1	CNX15SN2	CNX18SN1	CNX18SN2
12-30mm Corian Glacier White	**$3,936**	**$4,524**	**$5,611**	**$5,743**	**$6,131**	**$6,284**
	CNX9CGW	CNX12CGW	CNX15CGW1	CNX15CGW2	CNX18CGW1	CNX18CGW2
12-30mm Corian Colours	**$4,373**	**$5,027**	**$6,235**	**$6,381**	**$6,812**	**$6,982**
	CNX9CRC	CNX12CRC	CNX15CRC1	CNX15CRC2	CNX18CRC1	CNX18CRC2
Corian Integrated Bowl - Glacier White 100mm Thickness	**$4,565**	**$5,248**	**$6,509**	**$6,662**	**$7,112**	**$7,289**
	CNX9CIBW	CNX12CIBW	CNX15CIBW1	CNX15CIBW2	CNX18CIBW1	CNX18CIBW2
Corian Integrated Bowl - Colour 100mm Thickness	**$5,072**	**$5,831**	**$7,232**	**$7,402**	**$7,902**	**$8,099**
	CNX9CIBC	CNX12CIBC	CNX15CIBC1	CNX15CIBC2	CNX18CIBC1	CNX18CIBC2

*Excludes far north QLD